ventair tm

THE AIR MOVEMENT SPECIALISTS

12 MONTH WARRANTY 12 WARRANTY

Universal Bathroom Remote

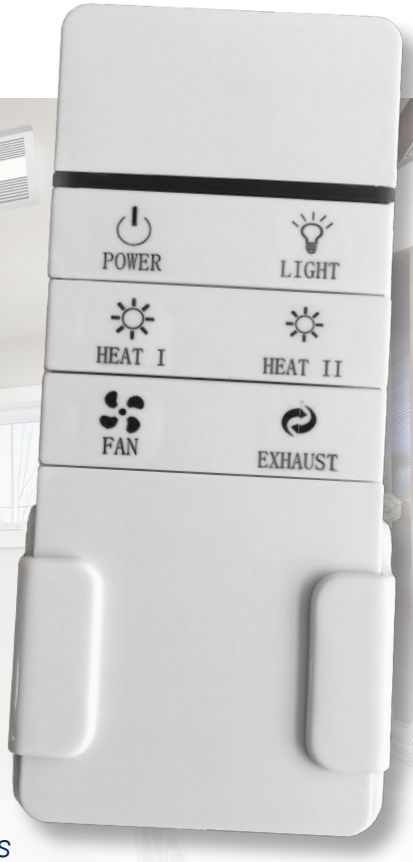

Universal Bathroom Remote Control

- *Suits both 3-in-1 and 4-in-1 (fan heater) bathroom units*
- *Long range operation*
- *Time & cost saving on installation; no need to install extra cabling*

POWER

Rated Power: 2500 watts
Rated Voltage: 250V 50Hz

Batteries: 1 x A27
Installation: Qualified Electrician Needed

INCLUDES

1 x Remote Control Handpiece
1 x Receiver

WIRING

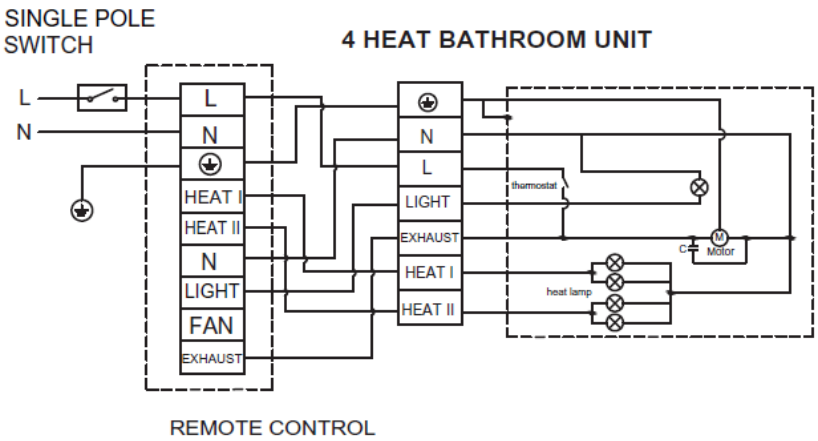

Model	Colour	Outer Carton	EAN13 Barcode
VUBHR	White	19339310010224	9 339310 010227

ventair tm
THE AIR MOVEMENT SPECIALISTS
+61 3 9775 0556
+61 3 9775 0775
sales@ventair.com.au
4 Capital Place, Carrum Downs Vic 3201
www.ventair.com.au

Data subject to change without notice.
LAST MODIFIED May 18, 2022 1:46 PM (V3RFR-v1)