29-31 Richland St. Kingsgrove. Sydney NSW 2208 Australia
Phone: 02 9554 9600 | Fax: 02 9554 9433
enquiries@domuslighting.com.au | www.domuslighting.com.au

Installation Manual

Date: October 13, 2022 3:33 PM

PARK-WG Series

Thank you for purchasing your new PARK Batten Light, Please take the time to read and understand the instruction sheet below. Failure to do so may void warranty.

Specifications

Voltage:	240V	Power:	7.5W/15W - 15W/30W	Beam Angle:	120°
IP Rating:	IP20	CCT:	3000K - 4000K - 5000K	CRI:	≥80
Dimmable:	No				

PARK-60 - Lumen (±5%):		
WW 3000K	NW 4000K	W 5000K
950lm/1800lm	1000lm/1950lm	1000lm/1850lm

PARK-120 - Lumen (±5%):		
WW 3000K	NW 4000K	W 5000K
2050lm/3850lm	2100lm/4050lm	2050lm/3900lm

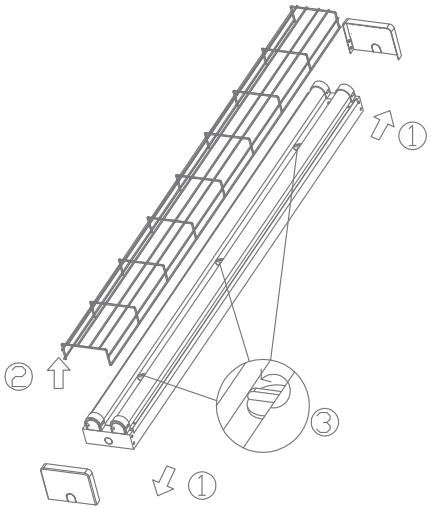

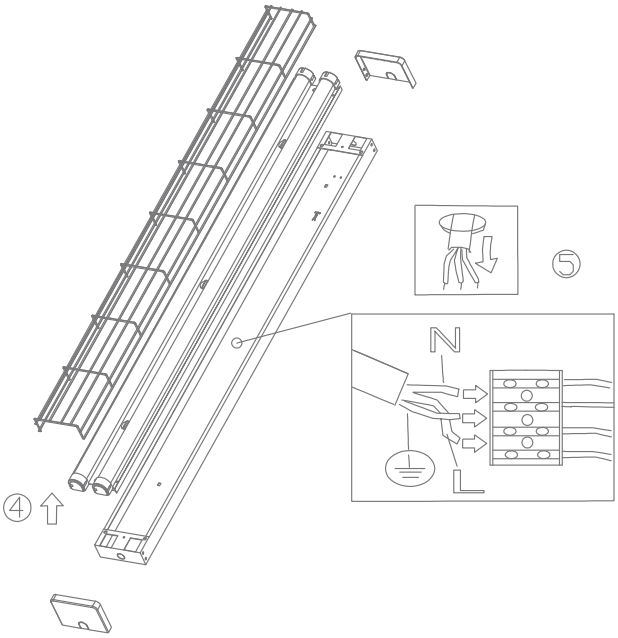

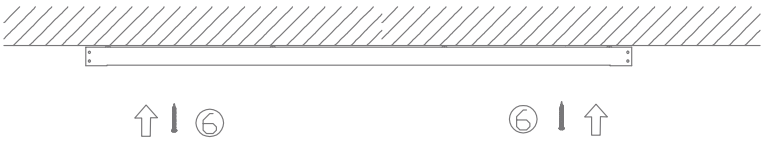

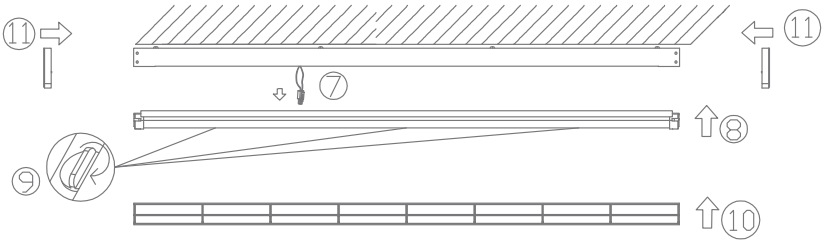

Note:
-The lamp must be installed by professional electrician
-Ensure the power supply is switched off before fitting this product
-Do not touch the lamp when in use
-Keep away from hot steam and corrosive gas